STE

WITH SIMPLE KEYWAY MOUNTING

200 – 14,000 Nm

NEW: ATEX

PROPERTIES

MATERIAL

- **Clutch segment:** hardened steel (nitrocarburized surface)
- **Elastomer segment:** TPU in various Shore hardnesses
- **Jaw coupling segments:** GGG40

DESIGN

- Drive side: coupling hub with simple keyway mounting
- Driven side: coupling hub with simple keyway mounting and elastomer segments
- Safety elements: evenly spaced around the circumference; externally adjustable

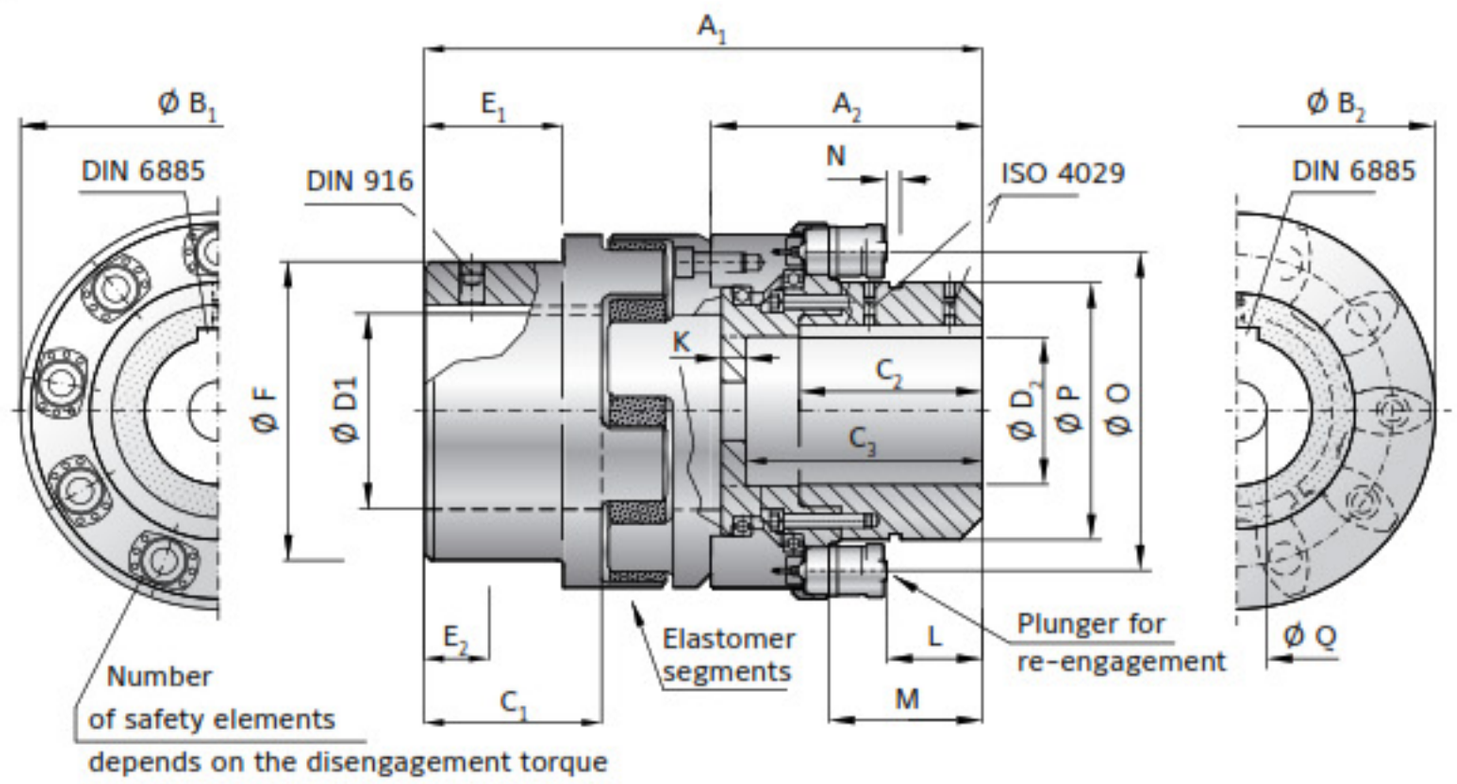

MODEL STE | SIZE 2 – 10

SIZE			2			4			5			10		
Adjustment range available from to	(KNm)		0.2-0.5	0.5-1.0	1.0 -1.5	0.6-0.9	1.1-1.7	1.6-2.6	0.7-2	1.2-4	3.2-5	2-5	4-10	6-14
			3×ST11	6×ST11	6×ST11	3xST11	6xST11	9xST11	3×ST16	6×ST16	6×ST16	3×ST16	6×ST16	9×ST16
Elastomer coupling size			2500			2500			4500			9500		
Elastomer insert type			A / B / D			A / B / D			A / B / D			A / B / D		
Overall length ±2	(mm)	A_1	312			360			373			460		
Length of torque limiting portion	(mm)	A_2	170			198			190			230		
Flange outside diameter (ST portion)	(mm)	B_1	198			211			220			270		
Flange outside diameter (elastomer portion)	(mm)	B_2	160			160			225			290		
Fit length/keyway length D1		C_1	88			88			113			142		
Fit length/keyway length D2	(mm)	C_2	85			120			100			122		
Bore depth (torque limiting portion)	(mm)	C_3	95			120			111			122		
Bore diameter (elastomer portion) Ø – Ø F7	(mm)	D_1	30-95			30-95			40-130			50-170		
Bore diameter (torque limiting portion) Ø – Ø F7	(mm)	D_2	30-80			40-100			40-90			40-110		
Length	(mm)	E_1	69			69			89			110		
Length	(mm)	E_2	36			36			47			57		
Hub diameter	(mm)	F	154			154			190			240		
Wall thickness	(mm)	K	16			20			24			32		
Distance	(mm)	L	50			81.5			56			74		
Distance	(mm)	M	81			112.5			97			115		
Actuation path	(mm)	N	3.5			3.5			4.5			4.5		
Mounting diameter - elements	(mm)	O	154			174			171			220		
Hub outside diameter	(mm)	P	112			138			122			170		
Bore for fastening screw	(mm)	Q	max ø17			max ø22			max ø25			max ø26		
Moment of inertia (approx.) D max. + max. sgmnt	(10^{-3}kgm²)		145			172			337			1145		
Speed max.	(rpm)		8500			6800			6300			5000		
Approx. weight at D max. + max. sgmnt	(kg)		35			39			47			110		
Axial	(mm)		± 3			± 3			± 4			± 5		
Lateral Elastomer insert type A / B	(mm)		0.5 / 0.3			0.5 / 0.3			0.5 / 0.3			0.6 / 0.4		
Angular Elastomer insert type A / B	(degree)		1.5 / 1.0			1.5 / 1.0			1.5 / 1.0			1.5 / 1.0		
Dynamic torsional stiffness at T_{KN} (Elastomer insert type A / B)	(10^3 Nm/rad)		175 / 216			175 / 216			337 / 743			1180 / 1340		

For technical information about the elastomer insert segments see page 97.